Accessories Brochure

For Contact Lens Manufacturing & Handling



Contamac™

Contents

Manufacturing 03

Laboratory Lens Handling 09

Packaging 10

Patient Lens Handling 14

Technical Information 16

How to read this brochure

Recommended for:



Optimum
F2
HEXA100



GM Advance
Contaflex
Contaflex GM3



Definitive
Unisil

(MOQ) - Minimum Order Quantity

Manufacturing



High Melt Black Wax

High melt wax for blocking Hydrophilic materials. Melting point 66°C.

Colour: Black
Quantity: 1 Tub (125 g) / 10 Sticks (20 g each) (MOQ)
Code: 4110047 (Tub)
4110048 (Sticks)

SOFT



Low Melt Black Wax

Low melt wax for blocking RGP materials. Melting point 44-51°C.

Colour: Black
Quantity: 1 Tub (125 g) / 10 Sticks (20 g each) (MOQ)
Code: 4110049 (Tub)
4110050 (Sticks)

RGP SI-HY



Blocking Kemdent Sticky Wax

High melt wax for blocking Hydrophilic materials. Melting point 55°C.

Colour: Yellow
Quantity: 1 Box (500 g in sticks) (MOQ)
Code: 4110053

SOFT

To request the Accessories Price List, please contact:
sales@contamac.co.uk
+44 (0) 1799 514800

Contamac

Manufacturing



Contapol 1 Polish

High quality polishing compound suitable for hydrophilic materials, particularly those based on HEMA. It contains a uniformly dispersed alumina abrasive, suspended in an oil base, to produce excellent surfaces.

Quantity: 1 Pot (250 g) (MOQ)

Code: 4230001

SOFT



Contapol 2 Polish

Polish specially formulated for use in high water content materials. It contains a finely graded abrasive suspended in a fine oil base, imparting excellent surface finishes.

Quantity: 1 Pot (250 g) (MOQ)

Code: 4230002

SOFT SI-HY



Contapol 3 Polish

Aqueous based premium polishing compound. Contains finely graded abrasive. Contapol 3 has a unique formula that eliminates solvent attack and enhances the wettability of the polished surface. Particularly suited to low wetting angle materials.

Quantity: 1 Bottle (1 kg) (MOQ) / 1 Bottle (5 kg)

Code: 4230004 (1 kg)
4230005 (5 kg)

RGP

To request the Accessories Price List, please contact:
sales@contamac.co.uk
+44 (0) 1799 514800

Contamac

Manufacturing



Polishing Powder

Finely graded polishing powder for customers who wish to produce their own polishing compounds.

Quantity: 1 Tub (500 g) (MOQ)/1 Drum* (10 kg)

Code: 4230006 (Tub)
4230007 (Drum)

*Available on request

RGP SOFT SI-HY



Lathe Setting Blanks

These blanks are used for regular tool set up, including checking sphericity and setting diamond height.

Size: 12.7 mm x 4.7 mm

Quantity: 100 Units (MOQ)

Code: 4130033

RGP SOFT SI-HY

To request the Accessories Price List, please contact:
sales@contamac.co.uk
+44 (0) 1799 514800

Contamac

Manufacturing



Corneal Arbour

High precision Delrin blocking arbours to deliver consistent results for both back and front surface lathing of corneal lenses. Ready to be machined to a specific radius of your choice.

Size: Ø 12.70 mm x 22.20 mm / 25.50 mm

Quantity: 20 Units (MOQ)

Code: 4110061 (12.70 x 22.20 mm)
4110062 (12.70 x 25.50 mm)

RGP SOFT SI-HY

For technical info click here

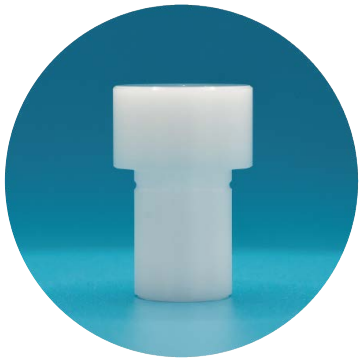

Scleral Arbour

High precision Delrin blocking arbours to deliver consistent results for both back and front surface lathing of scleral lenses. Ready to be machined to a specific radius of your choice. Compatible for use with our Optimum LD range of materials.

Size: Ø 14 mm, Ø 16 mm, Ø 18 mm, Ø 20 mm

Quantity: 10 Units (MOQ)

Code: 4110063 (Ø 14 mm)
4110064 (Ø 16 mm)
4110065 (Ø 18 mm)
4110066 (Ø 20 mm)

RGP SOFT SI-HY

For technical info click here
For technical info click here



Delrin Polishing Cup

High quality plastic polishing cup designed for use with our Delrin Polishing Sponge for front surface polishing.

Size: Ø 25.50 x 12.70 mm

Quantity: 10 Units (MOQ)

Code: 4110067

RGP SOFT SI-HY

For technical info click here

To request the Accessories Price List, please contact:
sales@contamac.co.uk
+44 (0) 1799 514800

Contamac

Manufacturing



Delrin Polishing Sponge

High quality foam sponge pads designed for use with our Delrin Polishing Cup.

Quantity: 100 Units (MOQ)
Size: Ø 25 mm x Depth 15 mm
Code: 4110034

RGP SOFT SI-HY



Delrin Drum Polishing Sponge

High quality foam sponge pad designed for use in a Delrin drum polishing tool for the modification or finishing of rigid contact lenses and prosthetic lenses.

Quantity: 100 Units (MOQ)
Size: Ø 7 cm x Depth 7 mm
Code: 4110019

RGP



Grey Roller Sponges

Designed for use with a variety of edge polishing machines.

Colour: Grey
Quantity: 20 Units (MOQ)
Size: Ø 5.5 cm x Depth 4.5 cm (Inner circle 1 cm)
Code: 4110058

RGP SOFT SI-HY

To request the Accessories Price List, please contact:
sales@contamac.co.uk
+44 (0) 1799 514800

Contamac

Manufacturing



Microfibre Polishing Cloth

The unique construction of the micro thin fibres is particularly suited to gas permeable lens polishing. Can be used on conventional and bladder polishing systems.

Colour: Beige
Quantity: 1 Unit (60 x 60 cm) (MOQ)
Code: 4110005

RGP



Brushed Cotton Polishing Cloth

Universal polishing cloth, widely used throughout the industry, combines excellent results with low cost.

Colour: White
Quantity: 2 Units (1 x 1 m each) (MOQ)
Code: 4110006

SOFT SI-HY

To request the Accessories Price List, please contact:
sales@contamac.co.uk
+44 (0) 1799 514800

Contamac

Laboratory Lens Handling



Tweezers

Large lens tweezers with replaceable super soft silicone tips for increased protection when handling soft or silicone hydrogel contact lenses.

Colour: White
Quantity: 250 Units (MOQ)
Code: 4110059



Tweezer Tips

Replacement super soft silicone tips for white tweezers.

Quantity: 1000 Units (MOQ)
Code: 4110043



Laboratory Lens Handler

High quality two part green polishing suction holder designed for handling gas permeable lenses during edge polishing. Two profiles included to allow a variety of RGP designs to be held.

Colour: Green
Quantity: 2 Units (MOQ)
Size: Convex 8 mm, Concave 9.5 mm
Code: 4110039

To request the Accessories Price List, please contact:
sales@contamac.co.uk
+44 (0) 1799 514800

Contamac

Packaging



Glass Vial

Glass vial manufactured from type 1 neutral glass and fully autoclavable. Compatible with Tear Off Aluminium Seal, Flip Tear Up seal and Siloprene Bungs.
Available in two tray sizes.

Quantity: 186 Units / 208 Units (MOQ)
Size: 5 ml, 20 mm
Code: 4110044 (186 Units)
4110045 (208 Units)

SOFT SI-HY

For technical info (186) click here
For technical info (208) click here



Siloprene Bung

Made from the finest pure siloprene, these stoppers are fully autoclavable and designed for use with our Glass Vials and both types of Crimp Top Seals. Packed without silicone lubricating oil.

Quantity: 1500 Units (MOQ)
Size: Ø 20 mm
Code: 4110004

SOFT SI-HY

For technical info click here

To request the Accessories Price List, please contact:
sales@contamac.co.uk
+44 (0) 1799 514800

Contamac

Packaging



Tear Off Aluminium Seal

All aluminium seal with tear out tab that allows the complete removal of the closure prior to or after use. For use with Steel Hand Crimper Gun, Glass Vial and Siloprene Bung.

Colour: Red, Green

Quantity: 1000 Units (MOQ)

Size: 20 mm

Code: 4110013 (Red)
4110012 (Green)

SOFT SI-HY

For technical info click here



Flip Tear Up Seal

Seal with plastic button attached to help facilitate the activation and complete removal of the seal from the container. For use with Steel Flip Off Hand Crimper Gun, Glass Vial and Siloprene Bung.

Colour: White, Blue

Quantity: 1000 Units (MOQ)

Size: 20 mm

Code: 4110009 (Blue)
4110010 (White)

SOFT SI-HY

For technical info click here

To request the Accessories Price List, please contact:
sales@contamac.co.uk
+44 (0) 1799 514800

Contamac

Packaging



Steel Hand Crimper Gun

Hand Crimper for manual crimping of Tear Off Aluminium Seals to Glass Vials.

Quantity: 1 Unit (MOQ)
Size: 20 mm
Code: 4110031



Steel Flip Off Hand Crimper Gun

Hand Crimper for manual crimping of Aluminium Flip Tear Up Seals to Glass Vials.

Quantity: 1 Unit (MOQ)
Size: 20 mm
Code: 4110018

To request the Accessories Price List, please contact:
sales@contamac.co.uk
+44 (0) 1799 514800

Contamac

Packaging

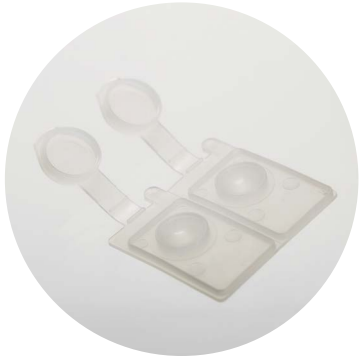

Double GP Mailers

High quality double mailers are available in clear plastic and designed for use with RGP lenses. Can be cut for use as single units.

Quantity: 250 Units (MOQ)

Code: 4110026

RGP

FDA Cleared

For technical info click here



Double Soft Lens Mailers

High quality double mailer in clear plastic, affording excellent protection for soft lenses. This mailer can also be used for larger RGP lenses up to approximately 16mm in diameter.

Quantity: 100 Units (MOQ)

Code: 4110027

RGP SOFT

FDA Cleared

For technical info click here

To request the Accessories Price List, please contact:
sales@contamac.co.uk
+44 (0) 1799 514800

Contamac

Patient Lens Handling



ScleralEase Multi-use Scleral Lens Handling Tool

An integrated, dual-function design that enables both application and removal of scleral lenses using a single device.

Colour: Green
Quantity: 1 Unit / 4 Units
Code: 4110068 (1 Unit)
4110060 (4 Units)

RGP



DMV Scleral Suction Holder

Lens inserter and remover made from high purity rubber. Designed specifically for use with scleral and other large diameter lenses.

Colour: Blue
Quantity: 3 Units (MOQ)
Code: 4110040

Item cannot be supplied to EU

RGP

To request the Accessories Price List, please contact:
sales@contamac.co.uk
+44 (0) 1799 514800

Contamac

Patient Lens Handling



DMV RGP Lens Remover Ultra

High quality solid rubber lens remover designed for RGP lenses. Supplied in individual storage cases.

Colour: Orange

Quantity: 3 Units (MOQ)

Code: 4110041

Item cannot be supplied to EU



DMV Soft Lens Handler/Remover

A durable rubber removal device specifically designed for soft and silicone hydrogel lenses. Ideal for patients with limited handling ability or for those who have difficulty touching their eyes. Supplied in individual storage cases.

Quantity: 3 Units (MOQ)

Code: 4110033

Item cannot be supplied to EU

To request the Accessories Price List, please contact:
sales@contamac.co.uk
+44 (0) 1799 514800

Contamac

Technical Information

Glass Vial (186) 5ml

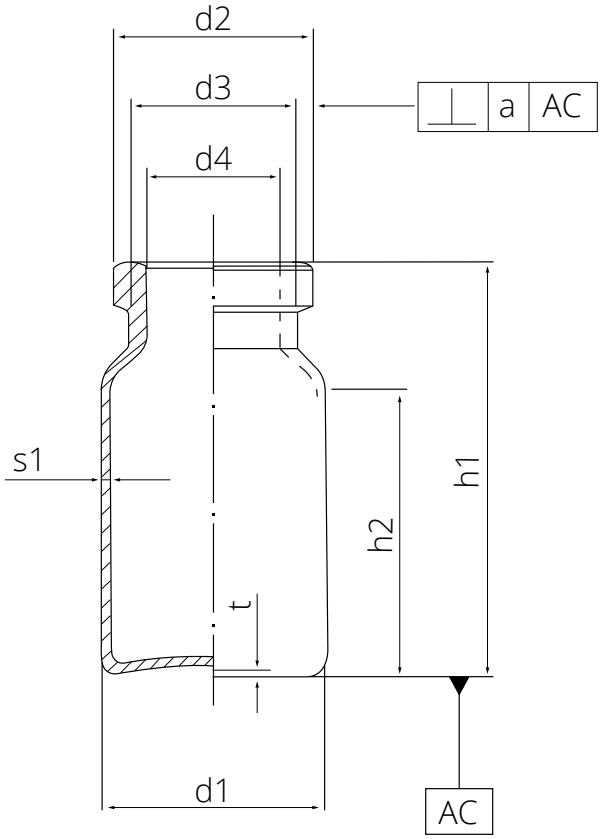

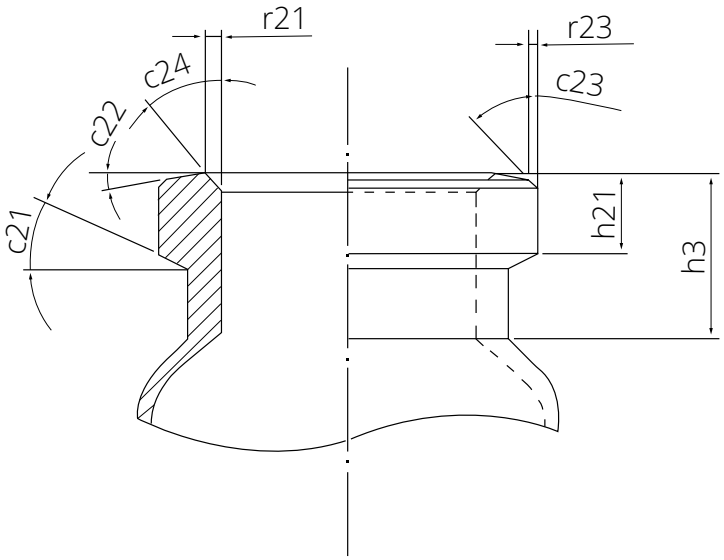

d1	22,25	+0,25	-0,25	h3	7,75	+0,5	-0,5	s1	1,1	+0,05	-0,05
d2	19,9	+0,2	-0,2	h21	3,0	+0,2	-0,2	r21	0,5	+0,2	-0,2
d3	16,05	max.		c21°	30,0	+5,0	-5,0	r23	0,5	ca.	
d4	12,75	+0,15	-0,15	c22°	5,0	+2,0	-2,0	t	0,4	+0.3	-0.3
h1	38,0	+0,5	-0,5	c23°	45,0	ca.		a	0,66		
h2	24,5	min.		c24°	45,0	ca.					

Product Info

To request the Accessories Price List, please contact:
sales@contamac.co.uk
+44 (0) 1799 514800

Contamac

Technical Information

Glass Vial (208) 5 ml

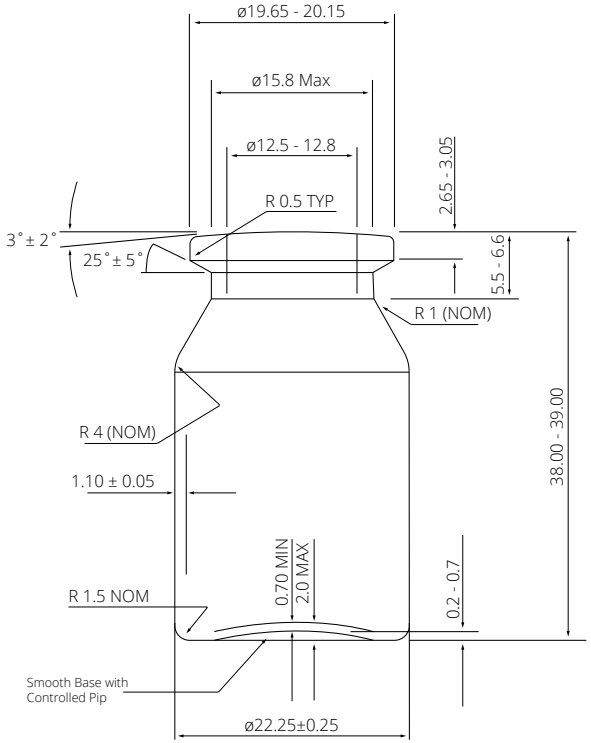

MATERIAL: Type 1, Clear Neutral Glass

Siloprene Bung 20 mm

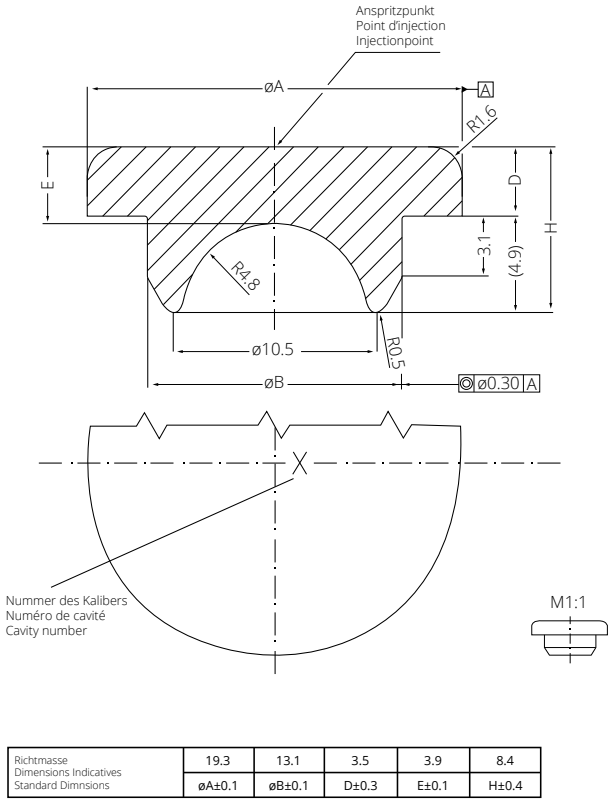

Richtmasse Dimensions Indicatives Standard Dimnsions	19.3	13.1	3.5	3.9	8.4
	øA±0.1	øB±0.1	D±0.3	E±0.1	H±0.4

To request the Accessories Price List, please contact:
sales@contamac.co.uk
+44 (0) 1799 514800

Contamac

Product Info

Technical Information

Tear Off Aluminium Seal

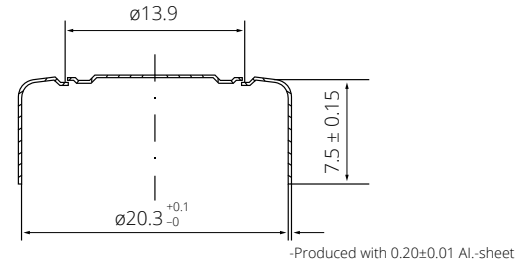

-Produced with 0.20±0.01 Al.-sheet

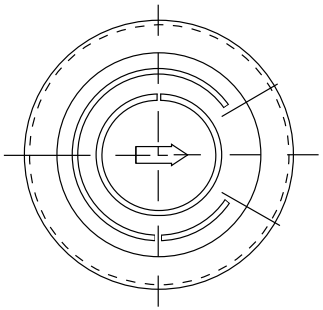

M1:1

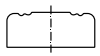

Flip Tear Up Seal

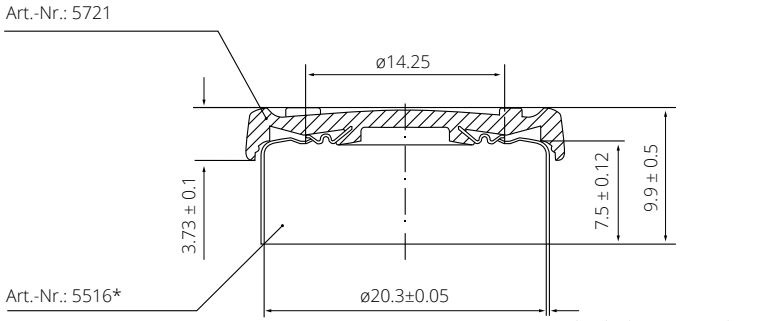

-Produced with 0.20±0.01 Al.-sheet

*Cavity marking is possibly visible when looking on the inner aluminium shell surface

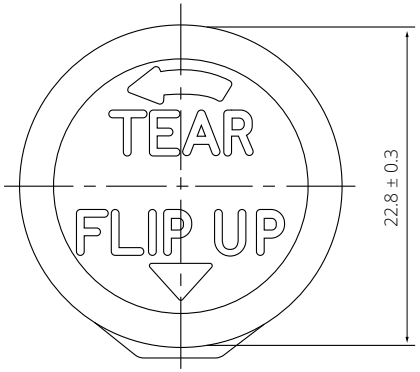

M1:1

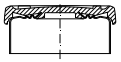

Product Info

To request the Accessories Price List, please contact:
sales@contamac.co.uk
+44 (0) 1799 514800

Contamac

Technical Information

Double GP Mailer

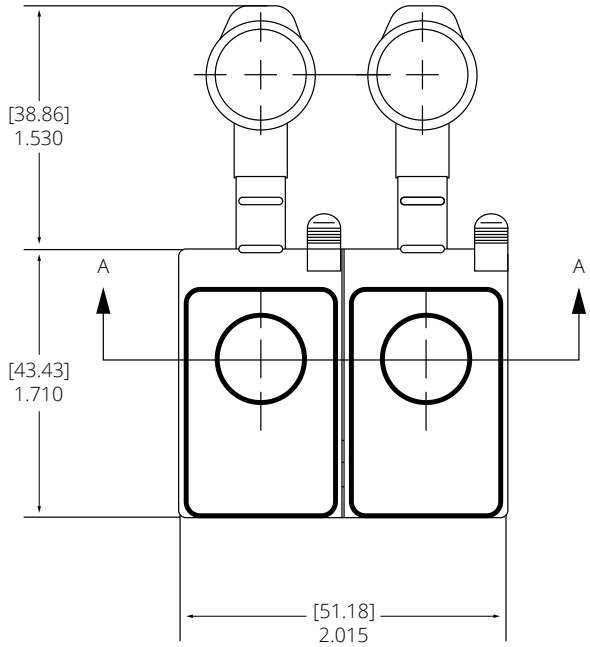

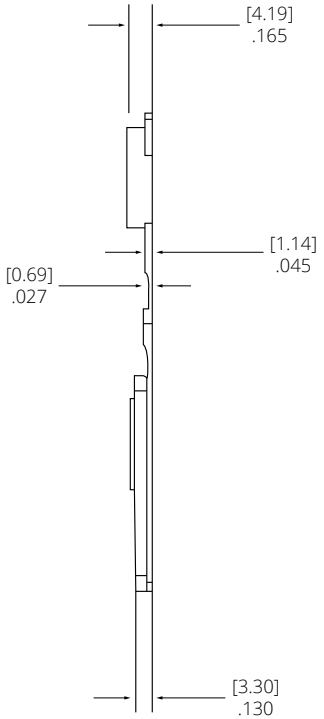

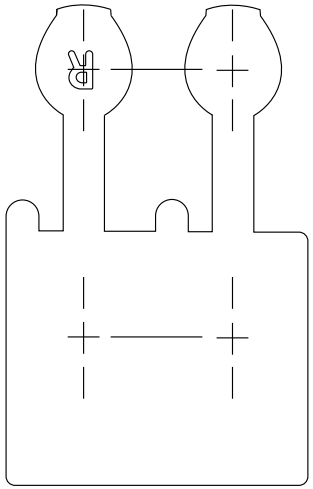

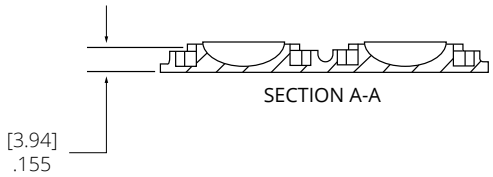

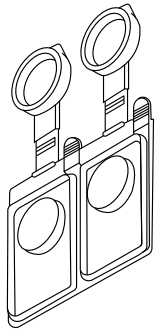

[Product Info]

To request the Accessories Price List, please contact:
sales@contamac.co.uk
+44 (0) 1799 514800

Contamac®

Technical Information

Double Soft Lens Mailers

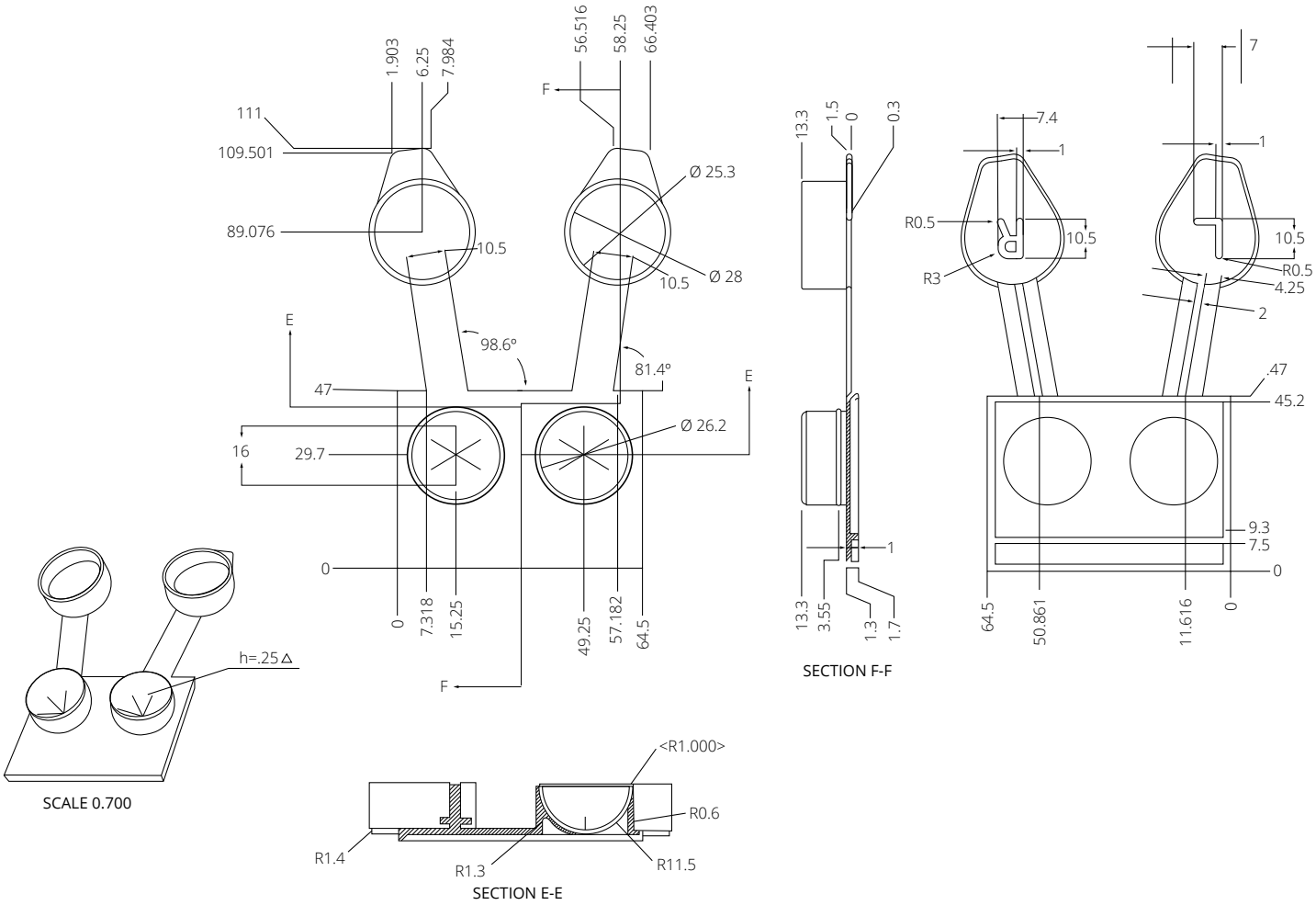

[Product Info]

To request the Accessories Price List, please contact:
sales@contamac.co.uk
+44 (0) 1799 514800

Contamac

Technical Information

Corneal Arbour
12.70 x 22.20mm

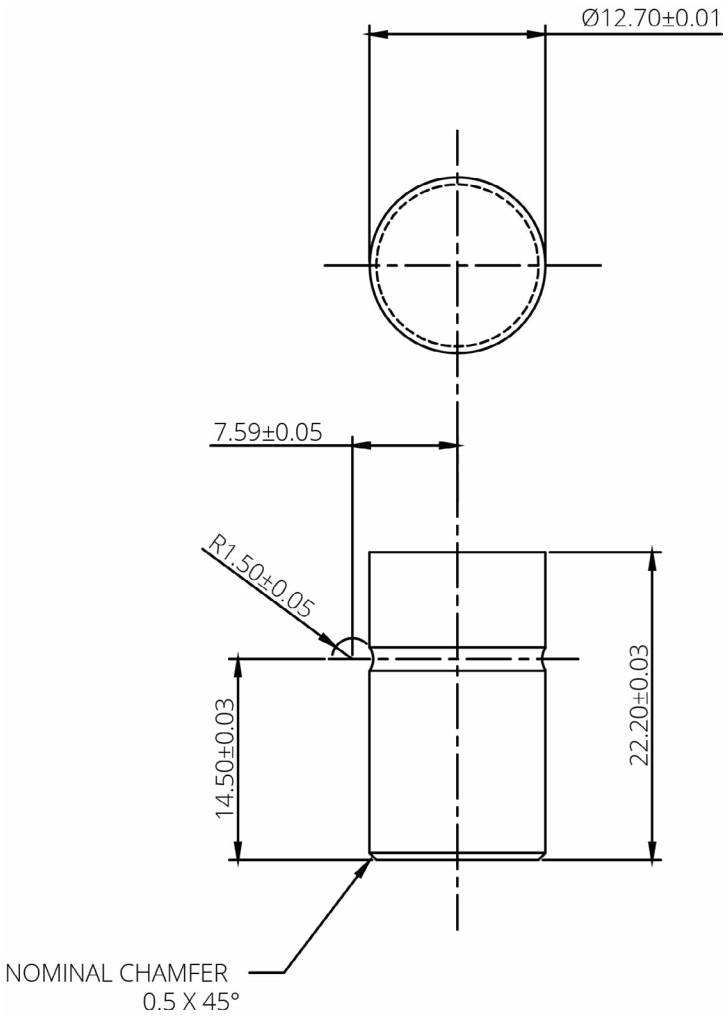

Corneal Arbour
12.70 x 25.50mm

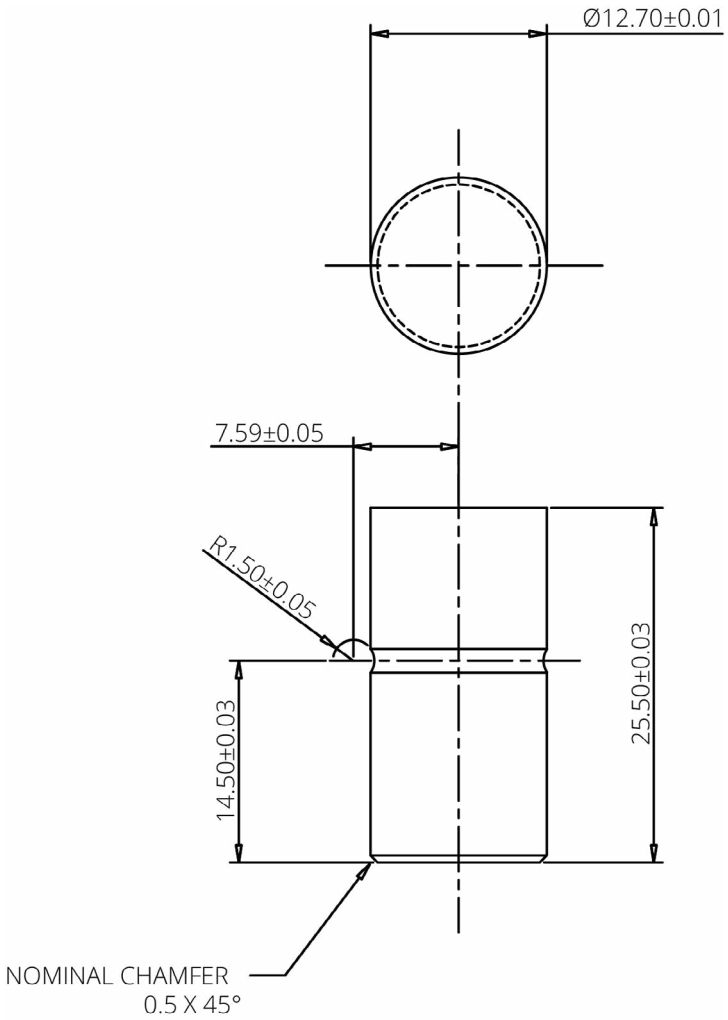

[Product Info]

To request the Accessories Price List, please contact:
sales@contamac.co.uk
+44 (0) 1799 514800

Contamac

Technical Information

Scleral Arbour
14.00 x 27.50mm

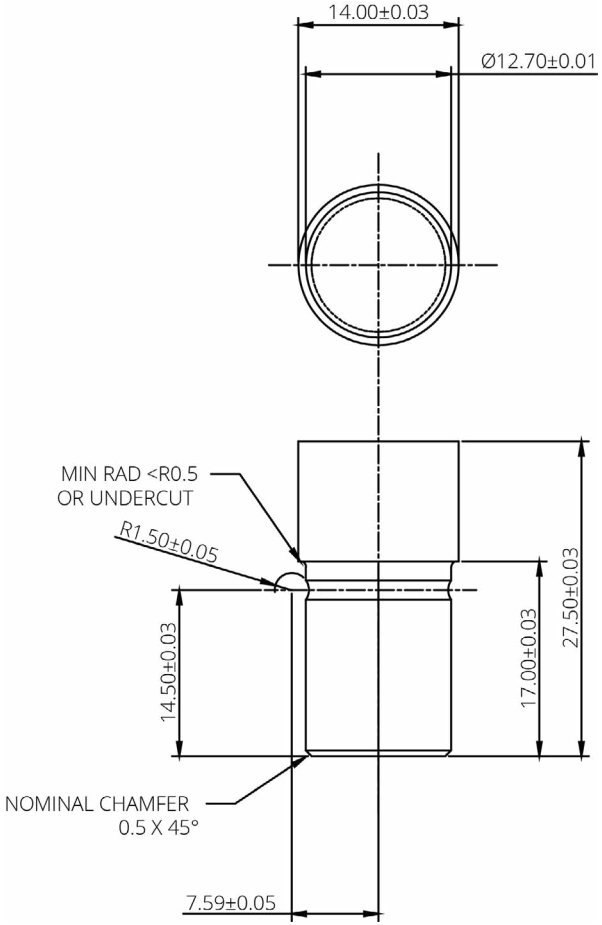

Scleral Arbour
16.00 x 27.50mm

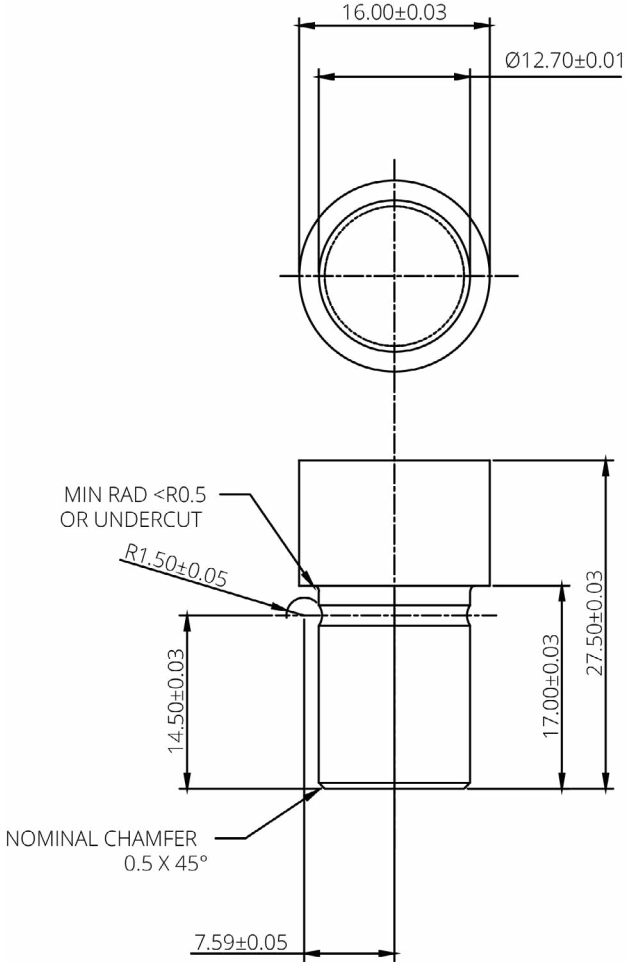

Product Info

To request the Accessories Price List, please contact:
sales@contamac.co.uk
+44 (0) 1799 514800

Contamac

Technical Information

Scleral Arbour
18.00 x 27.50mm

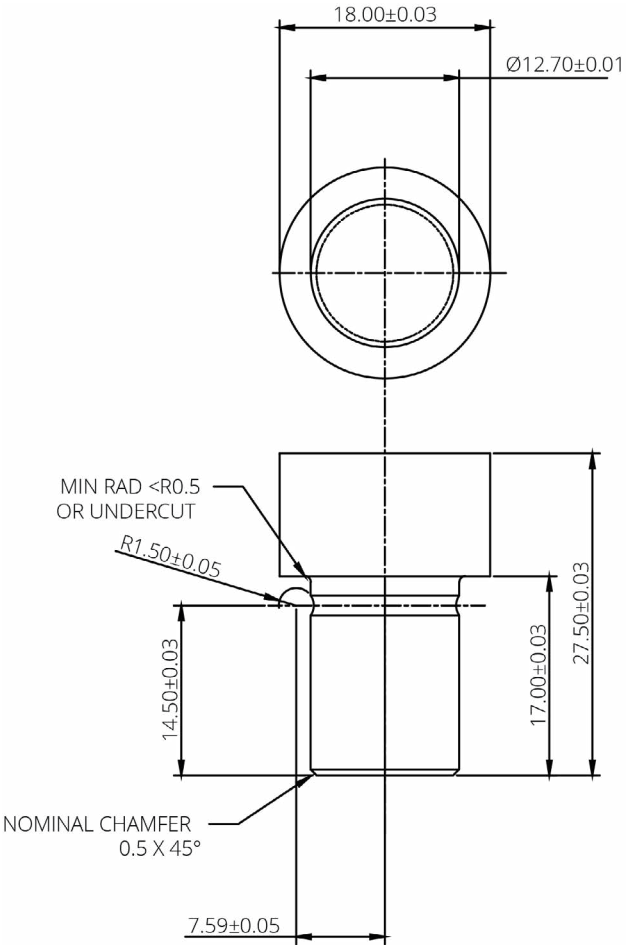

Scleral Arbour
20.00 x 27.50mm

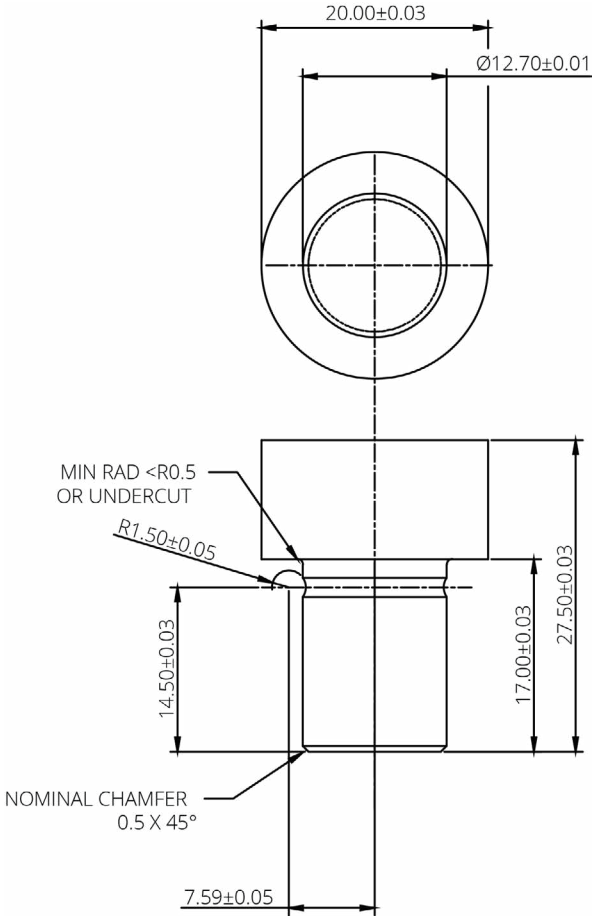

Product Info

To request the Accessories
Price List, please contact:
sales@contamac.co.uk
+44 (0) 1799 514800

Contamac

Technical Information

Delrin Polishing Cup
25.50 x 12.70mm

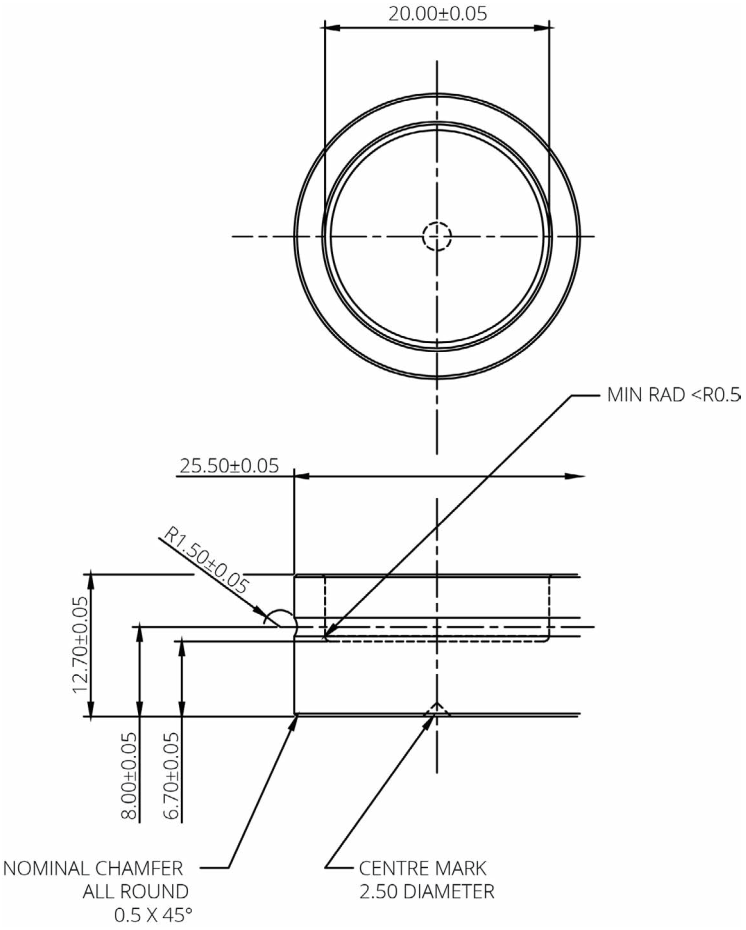

Product Info

To request the Accessories
Price List, please contact:
sales@contamac.co.uk
+44 (0) 1799 514800

Contamac

To request the Accessories Price List, please contact:

sales@contamac.co.uk
+44 (0) 1799 514800



Contamac™